REVISIONS				
LTR	DESCRIPTION	E.C.N.	DATE	BY/APP'D
B	REVISE AND REDRAW PER NEW STANDARD.	11187	12/15/95	DEG/SM.

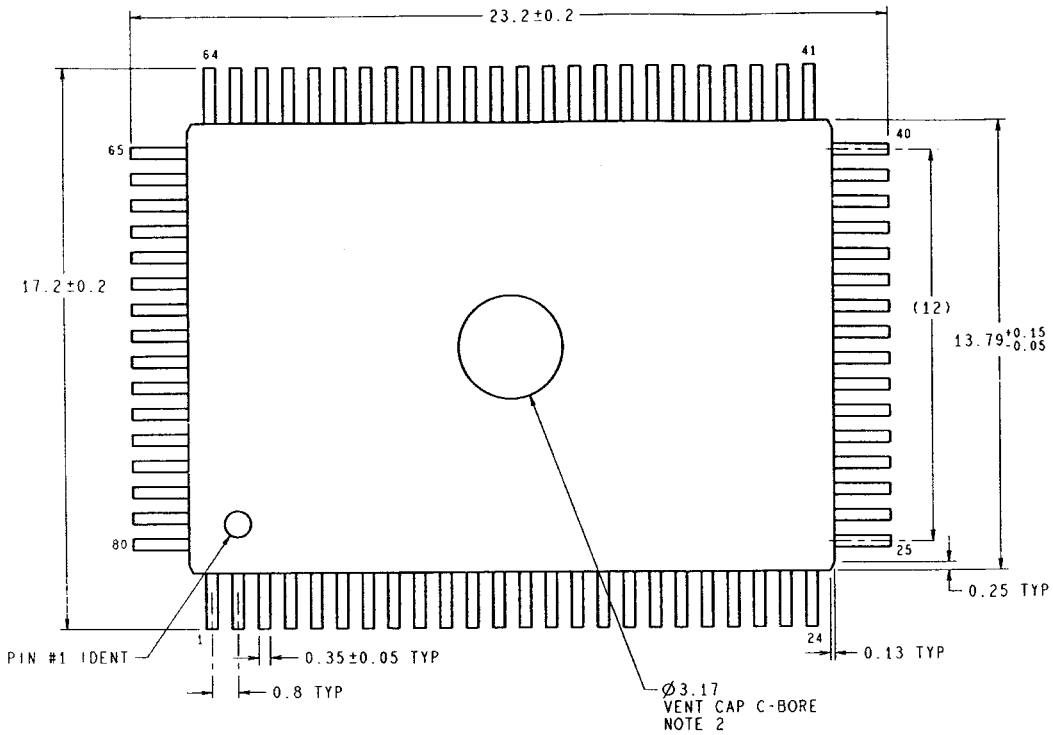

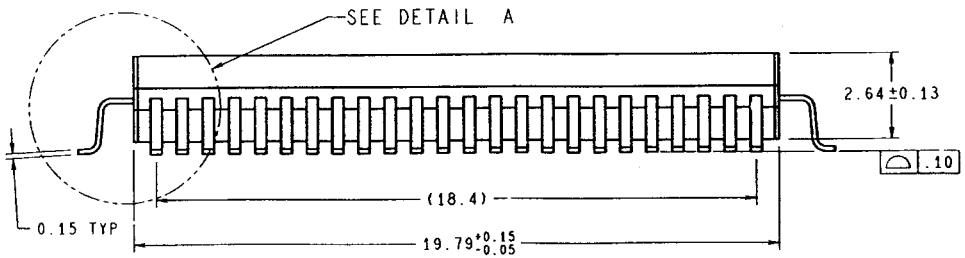

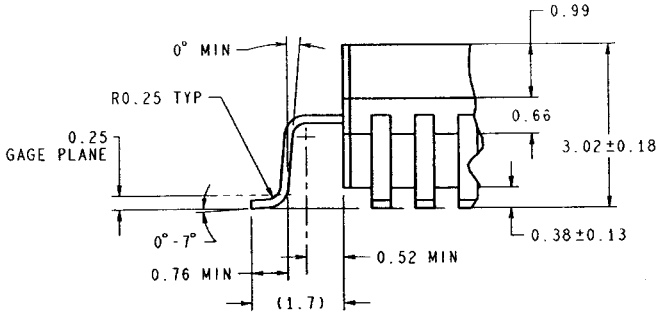

DETAIL A
TYP.SCALE:15X
NOTE 2

DIMENSIONS ARE IN MILLIMETERS

NOTES: UNLESS OTHERWISE SPECIFIED.

1. STANDARD LEAD FINISH: 5.08 MICROMETERS MINIMUM SOLDER PLATING (85/15) THICKNESS.
2. THE LEADS CAN BE FORMED FOR CAVITY UP OR DOWN:
   -THE VENT CAP WILL BE ON THE TOP FOR CAVITY UP (SHOWN)
   -THE VENT CAP WILL BE ON THE BOTTOM FOR CAVITY DOWN
3. REFERENCE: OLIN DRAWING 04-080-YH-001, REV C, DATED MAY/11

APPROVALS	DATE
DRAWN D.E.Grady	12/15/95
DFTG. CHK.	1/10/96
ENGR. CHK.	1/11/96

PROJECTION INCH [MM]

National Semiconductor
2900 Semiconductor dr, Santa Clara, CA 95052-8090

MQUAD, 14 X 20 X 3.0mm, 80 LEAD

SCALE	SIZE	DRAWING NUMBER	REV
N/A	C	MKT-ACC80A	B

DO NOT SCALE DRAWING | SHEET 1 of 1